BLSD.010201.100 Г4

Fig.1 A rotor assembled with a stator

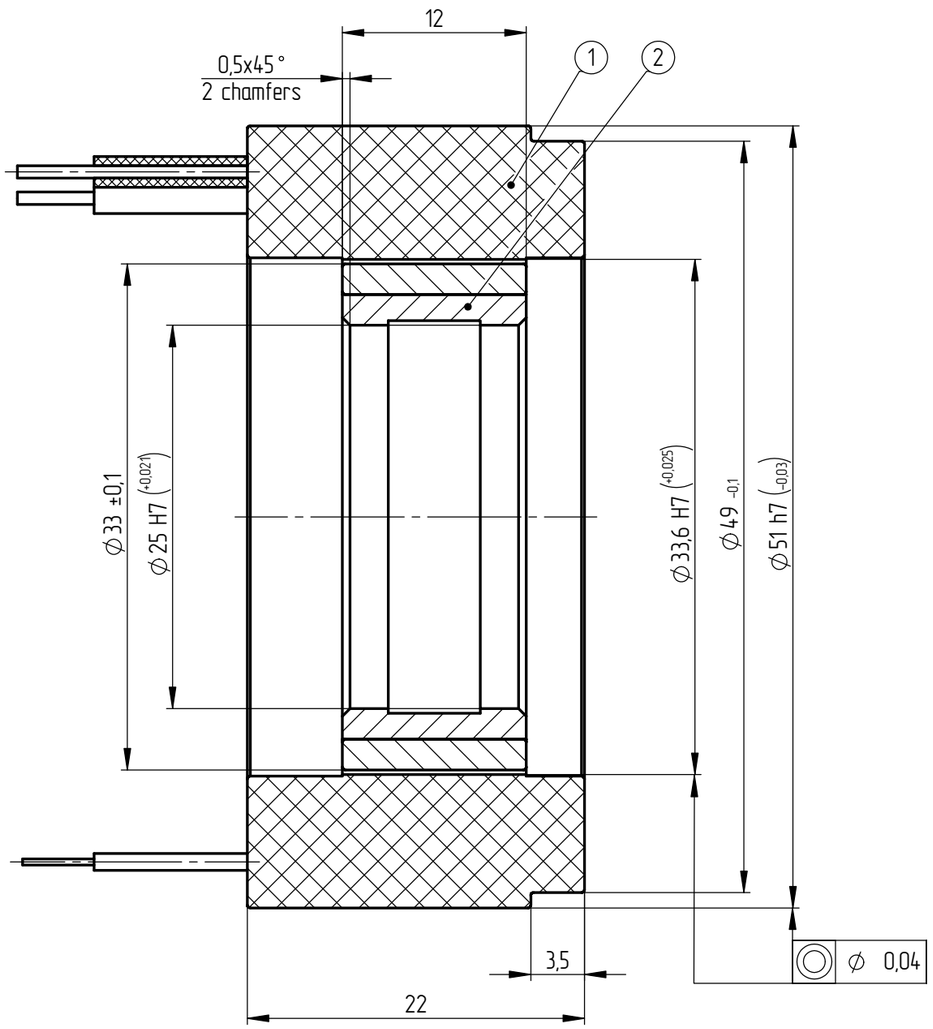

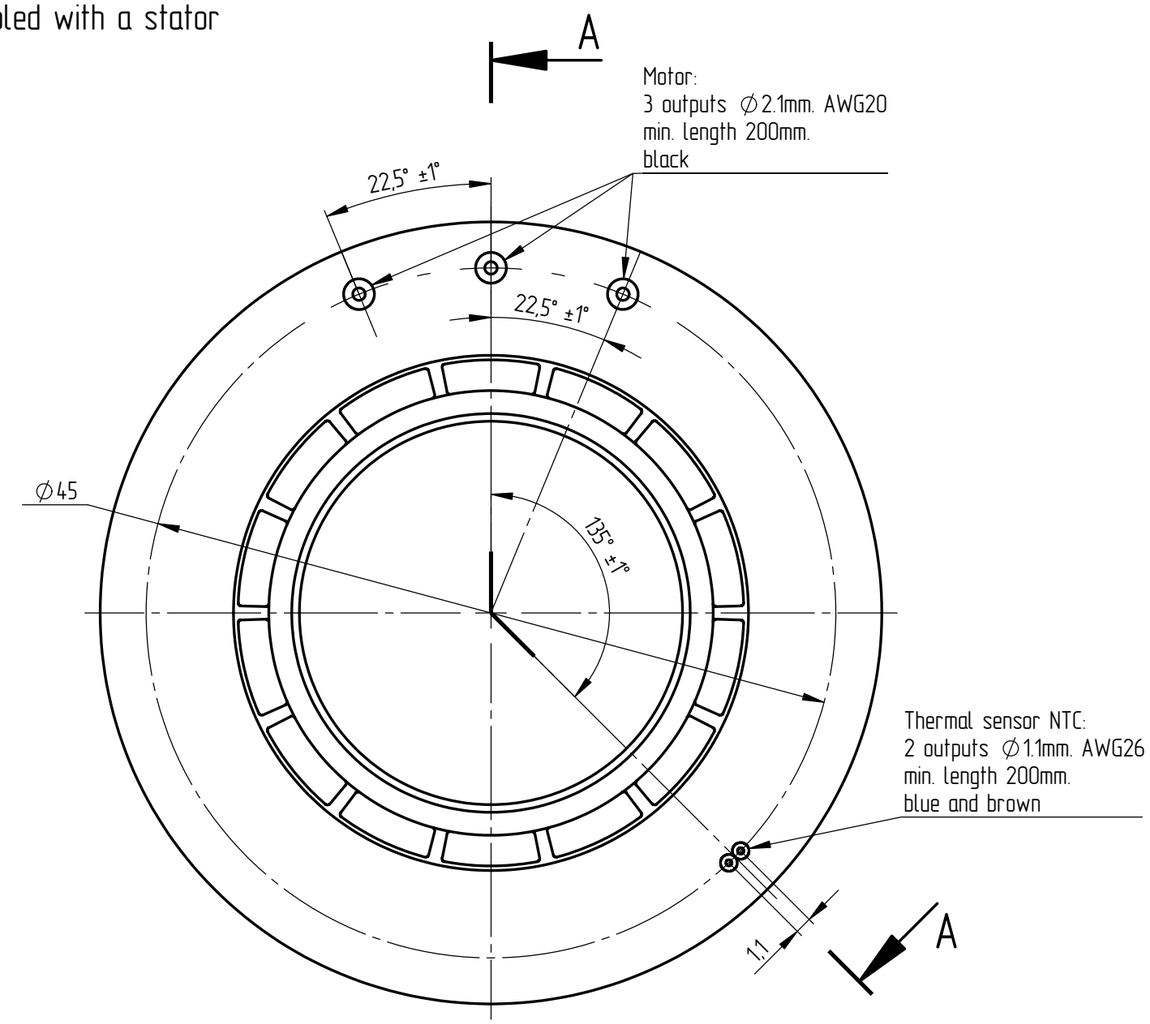

1. The dimensions are for reference.
2. Round off sharp edges to a chamfer of $0{,}2^{+0{,}2}$x45° or a radius $R0{,}2^{+0{,}2}$.
3. The unspecified radiuses of fillets are R0,5 max.

	Identification	Designation	Q-ty
1	BLSD.010201.010	Stator	1
2	BLSD.010201.020	Rotor ring	1

Rev.	Sheet	Document №	Signature	Date
Designed by		Rabtsevich		01.02.19
Checked by				
T. check				
Norm.check				
Appr. by				

BLSD.010201.100 Г4

Frameless motor
FM1601201
Dimension drawning

Letter	Weight	Scale
	0,13	2.5:1

Sheet 1 | of 2 sheets

ROZUM ROBOTICS

Format A3

Справ. №

BLSD.010201.100

Подп. и дата

Инв. № дубл.

Взам. инв. №

Подп. и дата

Инв. № подл.

BLSD.010201.100 ГЧ

A–A (4:1)

Fig. 2 The rotor-stator assembly in a housing

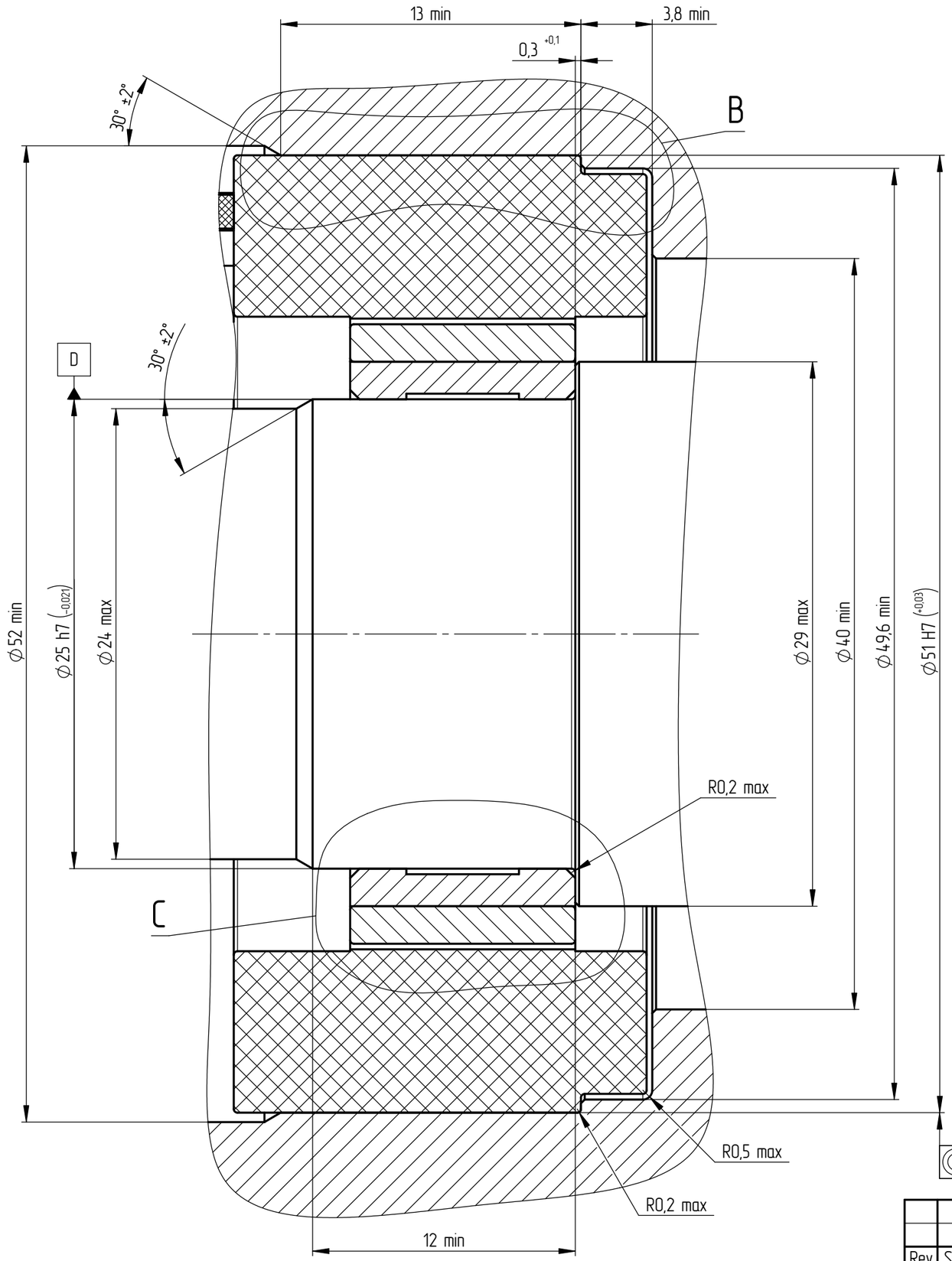

B (5 : 1)

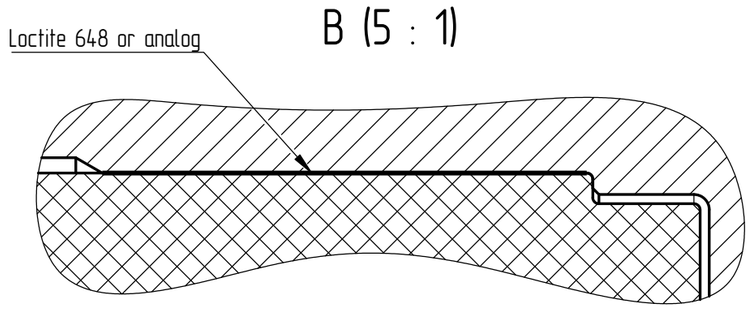

C (5 : 1)

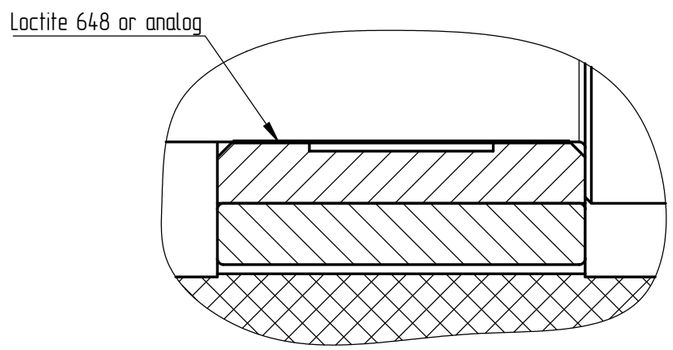

◎ Ø 0,05 D

Rev.	Sheet	Document №	Signature	Date

BLSD.010201.100 ГЧ

Sht. 2

Format A3

Подп. и дата | Инв. № дубл. | Взам. инв. № | Подп. и дата | Инв. № подл.